Challenges for productivity and industrialized Construction

Bmst. Ing. Martin Dobler
Austria

projektmanagement
für betonfertigteilbau
martin dobler

26.7.2017

Martin Dobler Projektmanagement GmbH
Wingertstr. 6 | 6824 Schlins | Österreich
Tel. +43 660 677 59 18
info@martindobler.com | www.martindobler.com

projektmanagement
für betonfertigteilbau
martin dobler

Structure of the talk

- Industrialization
- Building systems
- Building systems with precast concrete
- Economy aspects of an precast production plant
- Requirements for successful industrialization

Industrialization

Industrialized production of housing in the DDR 1961 – 1990 with precast concrete

Martin Dobler Projektmanagement GmbH
Wingertstr. 6 | 6824 Schlins | Österreich
Tel. +43 660 677 59 18
info@martindobler.com | www.martindobler.com

Industrialization

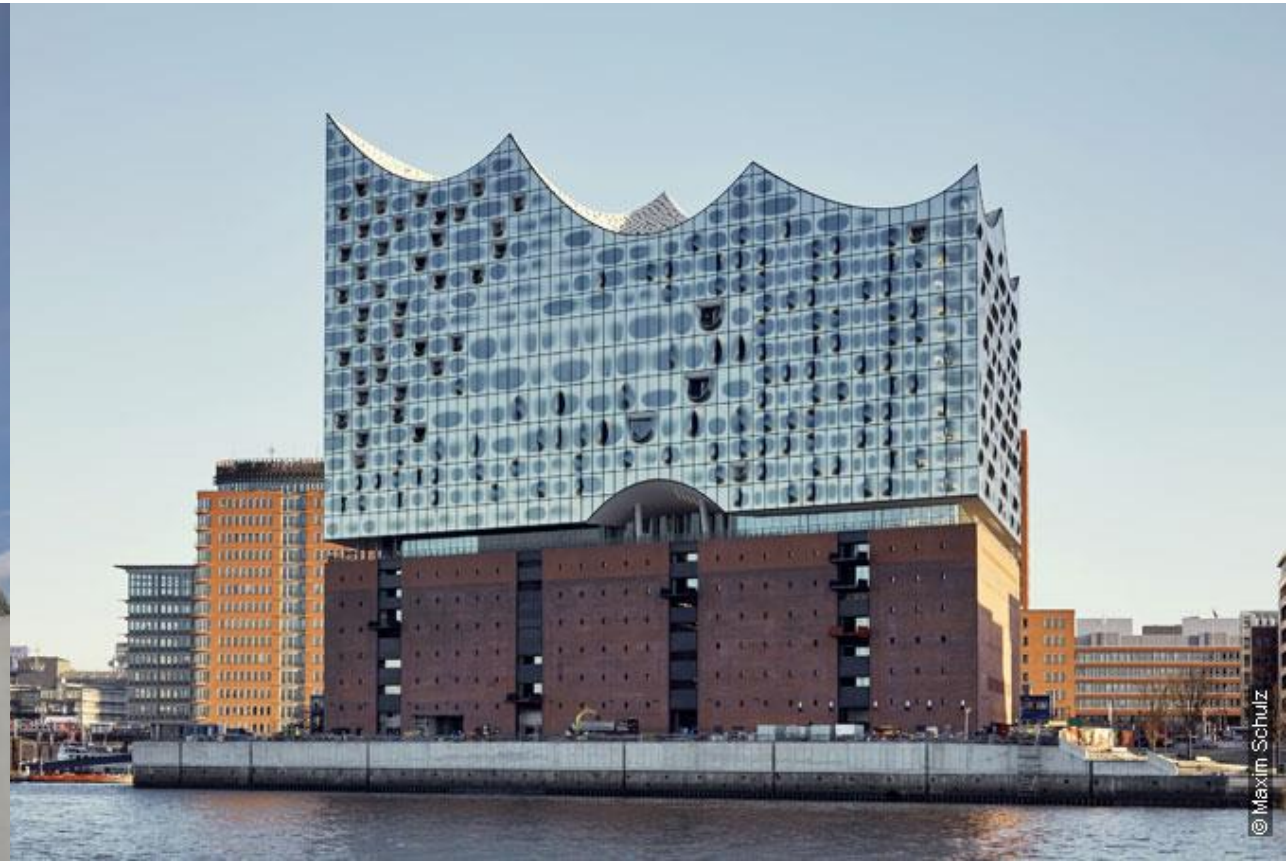

Uncontrolled customization makes industrialization difficult or even impossible to achieve.

Industrialization

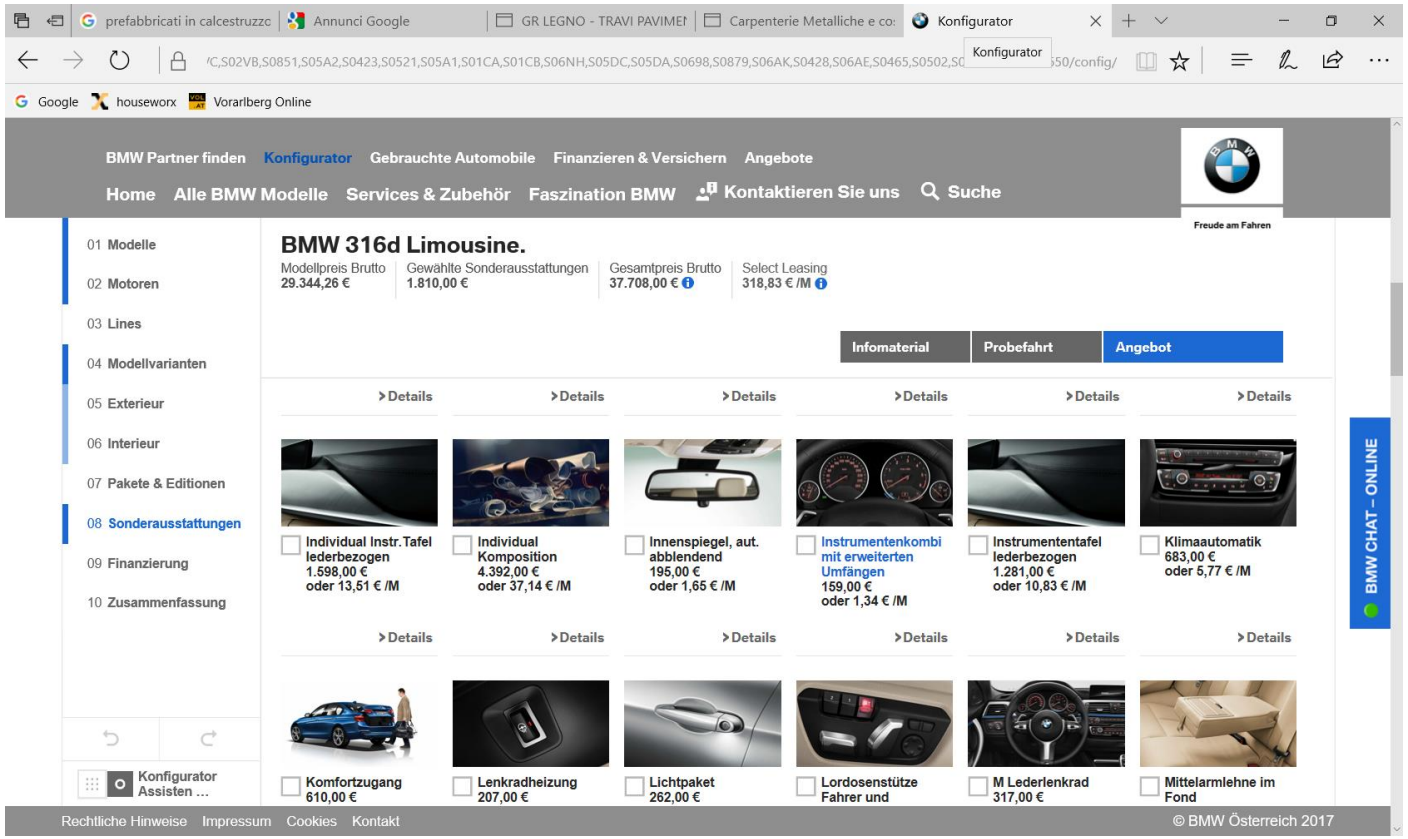

The automotive industry set a prime example.

Industrialization

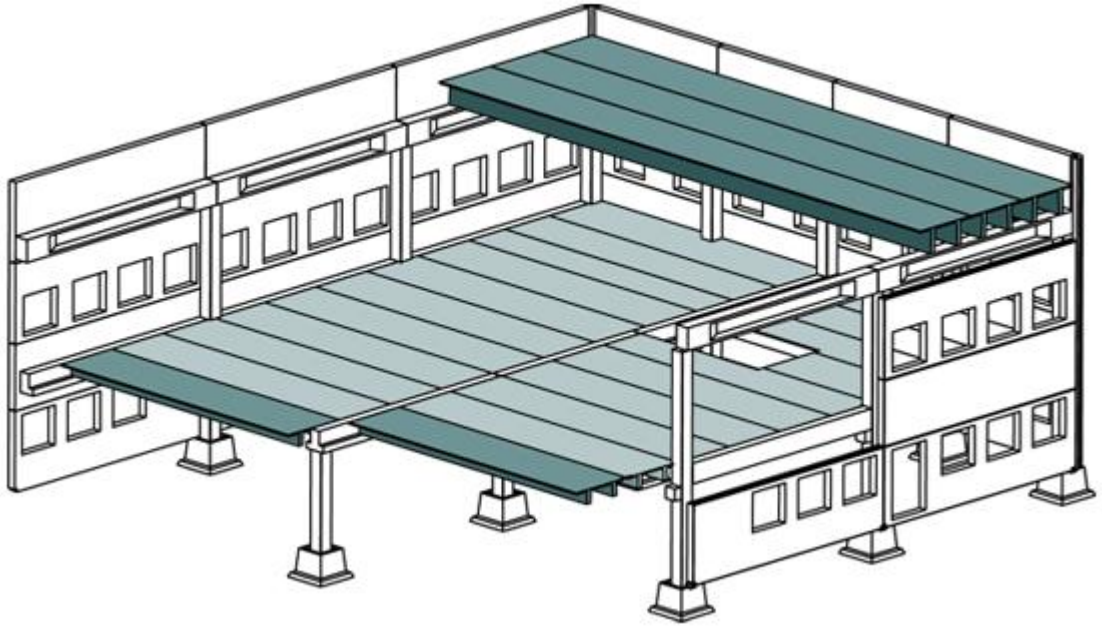

Example of a standard building-systems in Italy

Martin Dobler Projektmanagement GmbH
Wingertstr. 6 | 6824 Schlins | Österreich
Tel. +43 660 677 59 18
info@martindobler.com | www.martindobler.com

Industrialization

Example – Building system with a wooden construction in Austria

Martin Dobler Projektmanagement GmbH
Wingertstr. 6 | 6824 Schlins | Österreich
Tel. +43 660 677 59 18
info@martindobler.com | www.martindobler.com

Industrialization

Example – Building system with wooden room modules – European school in Frankfurt (Germany)

Martin Dobler Projektmanagement GmbH
Wingertstr. 6 | 6824 Schlins | Österreich
Tel. +43 660 677 59 18
info@martindobler.com | www.martindobler.com

Industrialization

Example – Building system with precast concrete of a discounter for Switzerland – erected 100 times in 5 years

Martin Dobler Projektmanagement GmbH
Wingertstr. 6 | 6824 Schlins | Österreich
Tel. +43 660 677 59 18
info@martindobler.com | www.martindobler.com

Industrialization

Example – Standardized steel construction

Martin Dobler Projektmanagement GmbH
Wingertstr. 6 | 6824 Schlins | Österreich
Tel. +43 660 677 59 18
info@martindobler.com | www.martindobler.com

Industrialization

Example – Façade with precast concrete in Zurich (Switzerland)

Industrialization

Example – Building system for tunnelling

Martin Dobler Projektmanagement GmbH
Wingertstr. 6 | 6824 Schlins | Österreich
Tel. +43 660 677 59 18
info@martindobler.com | www.martindobler.com

Industrialization

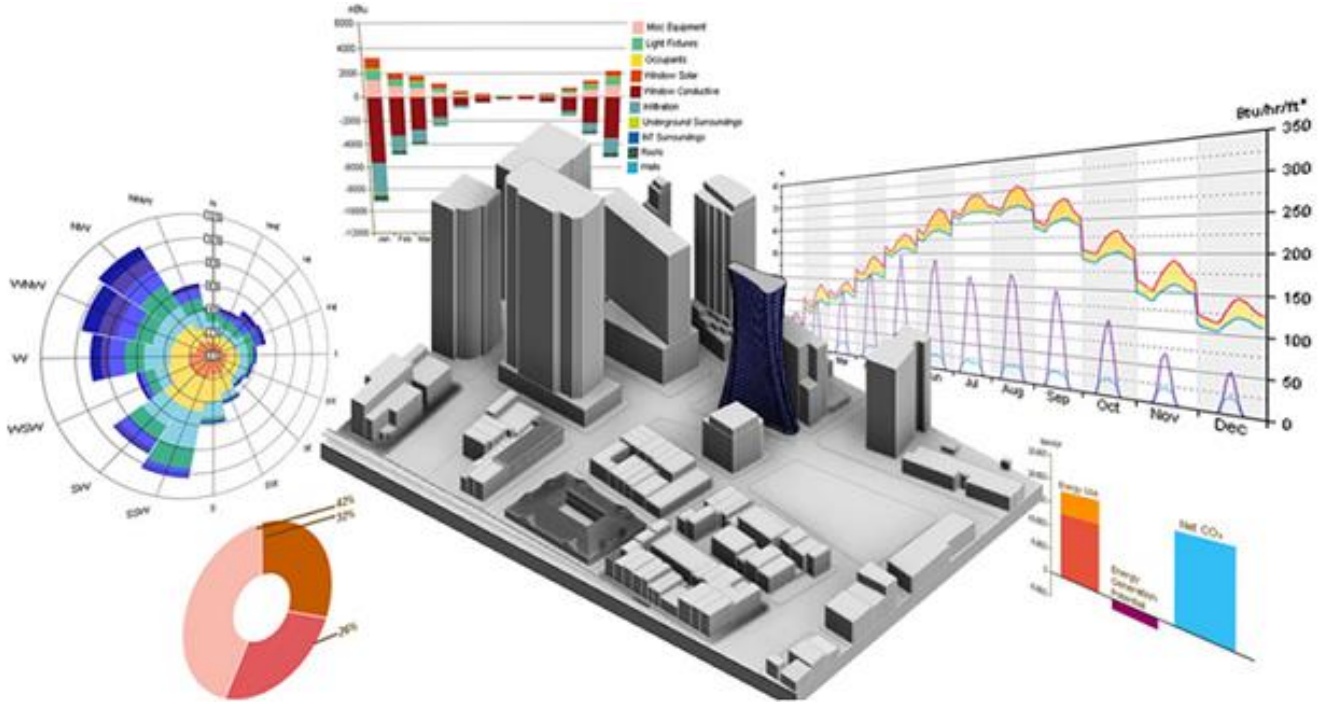

Example – BIM – optimization of building processes

Martin Dobler Projektmanagement GmbH
Wingertstr. 6 | 6824 Schlins | Österreich
Tel. +43 660 677 59 18
info@martindobler.com | www.martindobler.com

projektmanagement
für betonfertigteilbau
martin dobler

Industrialization – Building System

The basis of all this buildings are different building/construction systems.

Industrialization means that we have to find construction systems that:

- comply with specific technical requirements
- are economical
- are accepted by the market
- offer sufficient individuality but
- are as standardized as possible so that
- industrial manufacturing processes can be used

Step 2 is that we must also:

- build factories
- apply construction systems
- continue to optimize
- earn money

Industrialization – who should do it?

In a free market economy, every entrepreneur is focused on the following aspects:

- Can I earn money with this idea?
- Do I have the know-how?
- How great is the risk?
- How high is the investment?
- Where can I find the skilled labor?
- How can I assess the market?

What is clear, however, is that:

- The companies that have the best construction systems on the market will earn the most money
- Companies that are left behind will go bankrupt

Industrialization - why? - motivation

Motivation varies widely from country to country around the world. For example that could be:

- urgent shortage of low cost housing
- strong competition between companies
- availablly subsidies for research and development

Martin Dobler Projektmanagement GmbH
Wingertstr. 6 | 6824 Schlins | Österreich
Tel. +43 660 677 59 18
info@martindobler.com | www.martindobler.com

Industrialization - benefits

It is faster, cheaper and means fewer emissions on the building site. It also produces a higher quality building.

Benefits for investors:
- Lower price
- Shorter capital commitment, interest savings through shorter construction times
- Increased cost certainty

For the building contractor:
- Higher turnover due to optimized construction system
- Higher profits
- Better cost control
- Clear processes
- Fewer complaints

For the end customer:
- Lower rents
- Lower purchase prices
- Better quality

Martin Dobler Projektmanagement GmbH
Wingertstr. 6 | 6824 Schlins | Österreich
Tel. +43 660 677 59 18
info@martindobler.com | www.martindobler.com

Construction systems with precast concrete element

The use of precast concrete elements offers the following benefits compared to conventional construction methods:

- It is the best way of industrializing shell construction, as up to 75% of the manual labor can be replaced by modern machine production
- Shell construction can be prefabricated to a large extent
- Electrical installation , windows and doors can be pre-installed in the factory
- In some cases, even the painting can be done in the factory

The benefits are:

- Shorter building time
- Increased quality
- Increased cost certainty

Construction systems with precast concrete element

Concrete has the following properties:

- High static stability
- Long-term durability
- High level of sound absorption
- High fire resistance
- Precast concrete elements can also be used without problems in earthquake zones. The important thing is to choose the correct connection methods and a clearly defined static system.

Construction systems with precast concrete element

Example – Bridges

Construction systems with precast concrete element

Example – Examples of a industrial building in Wil (Switzerland)

Martin Dobler Projektmanagement GmbH
Wingertstr. 6 | 6824 Schlins | Österreich
Tel. +43 660 677 59 18
info@martindobler.com | www.martindobler.com

Construction systems with precast concrete element

Example – Examples of a commercial building in Feldkirch (Austria)

Martin Dobler Projektmanagement GmbH
Wingertstr. 6 | 6824 Schlins | Österreich
Tel. +43 660 677 59 18
info@martindobler.com | www.martindobler.com

Construction systems with precast concrete element

Example – Housing Project with precast concrete in Buchs (Switzerland)

Martin Dobler Projektmanagement GmbH
Wingertstr. 6 | 6824 Schlins | Österreich
Tel. +43 660 677 59 18
info@martindobler.com | www.martindobler.com

Construction systems with precast concrete element

Example – Housing project with a precast concrete facade in Widnau (Switzerland)

Martin Dobler Projektmanagement GmbH
Wingertstr. 6 | 6824 Schlins | Österreich
Tel. +43 660 677 59 18
info@martindobler.com | www.martindobler.com

Construction systems with precast concrete element

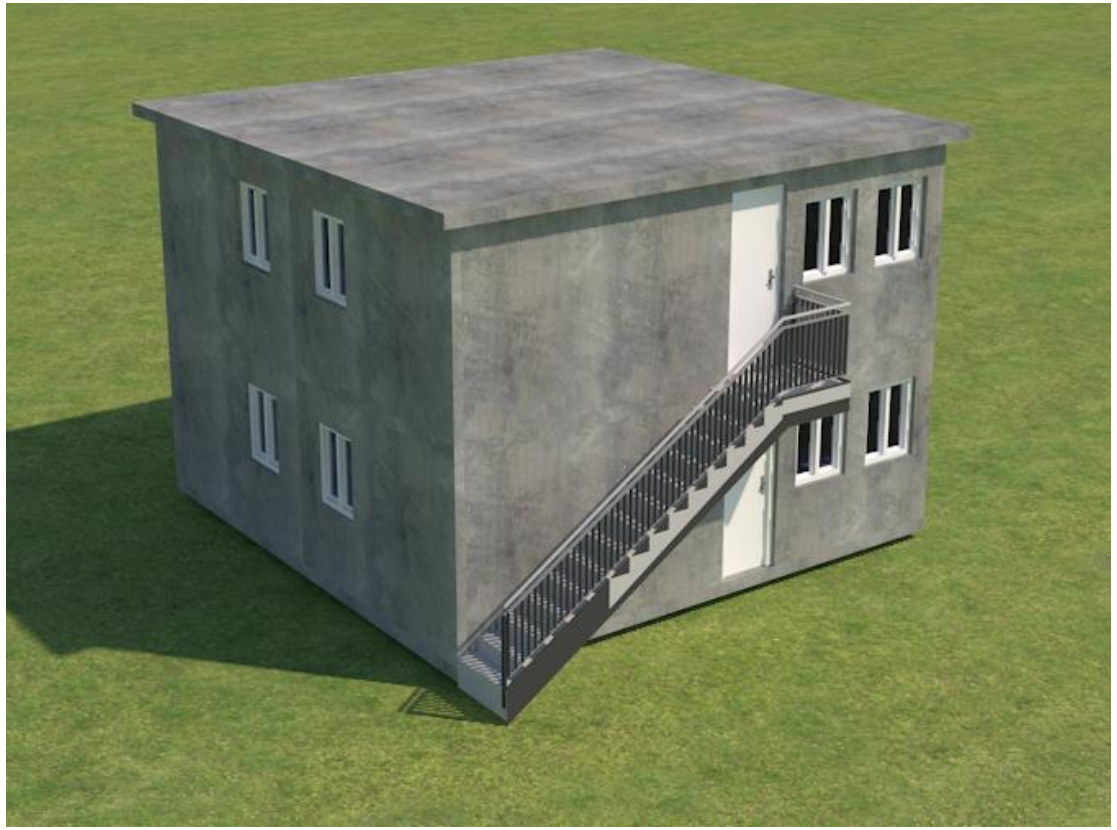

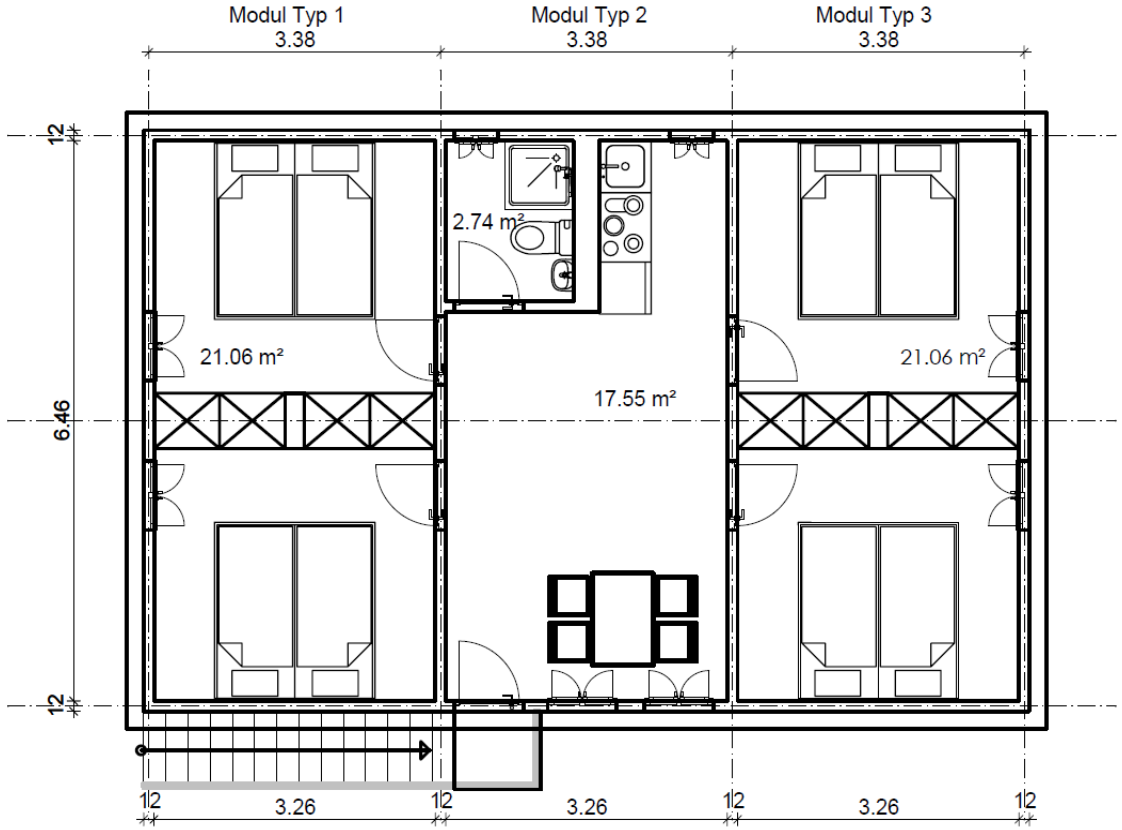

Example – Development of a low-cost housing system by Martin Dobler

Martin Dobler Projektmanagement GmbH
Wingertstr. 6 | 6824 Schlins | Österreich
Tel. +43 660 677 59 18
info@martindobler.com | www.martindobler.com

projektmanagement
für betonfertigteilbau
martin dobler

Construction systems for residential buildings

Typical wall systems for residential buildings

- Sandwich walls
- Solid walls
- Double walls

Typical floor systems for residential buildings

- Hollow-core floor slabs
- Solid floor slabs
- Composite floor plates

Construction systems for residential buildings

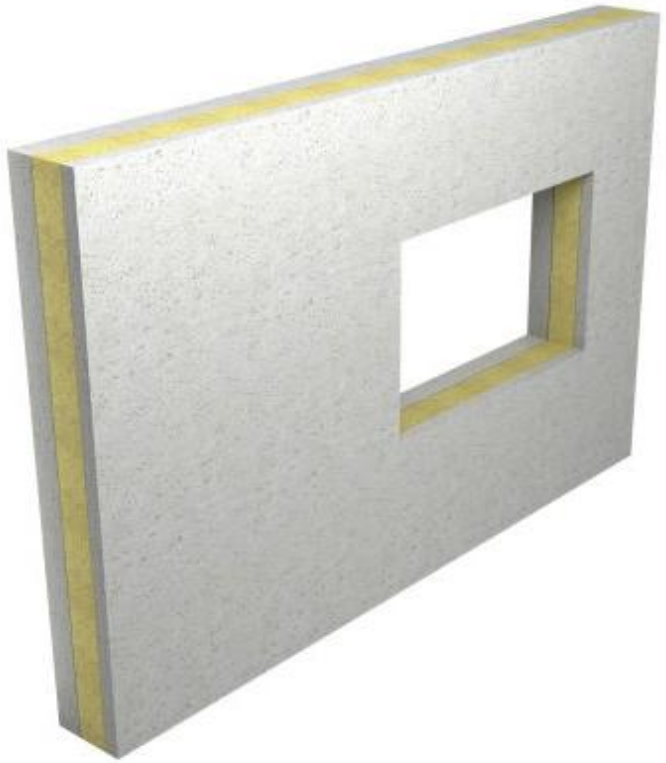

Sandwich walls

Martin Dobler Projektmanagement GmbH
Wingertstr. 6 | 6824 Schlins | Österreich
Tel. +43 660 677 59 18
info@martindobler.com | www.martindobler.com

Construction systems for residential buildings

Solid walls

Martin Dobler Projektmanagement GmbH
Wingertstr. 6 | 6824 Schlins | Österreich
Tel. +43 660 677 59 18
info@martindobler.com | www.martindobler.com

Construction systems for residential buildings

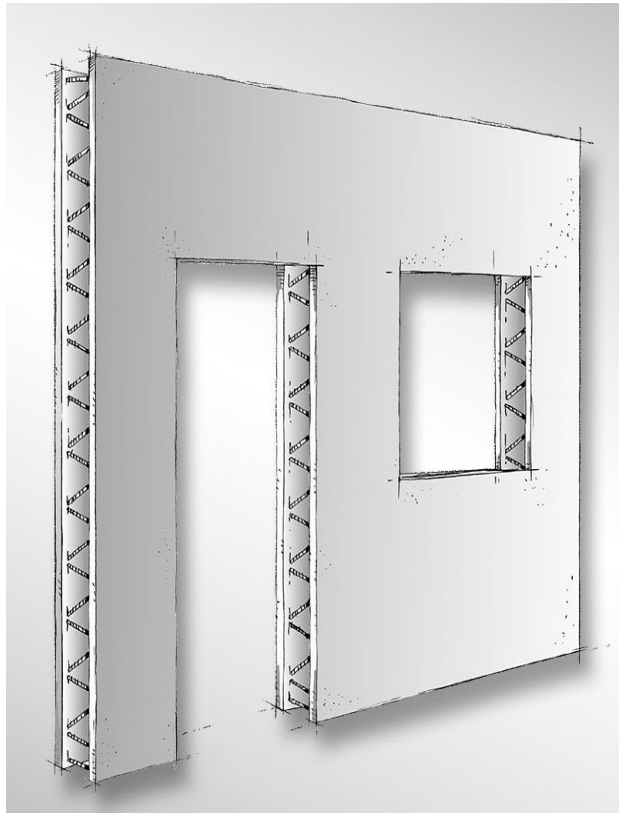

Double walls

Martin Dobler Projektmanagement GmbH
Wingertstr. 6 | 6824 Schlins | Österreich
Tel. +43 660 677 59 18
info@martindobler.com | www.martindobler.com

Construction systems for residential buildings

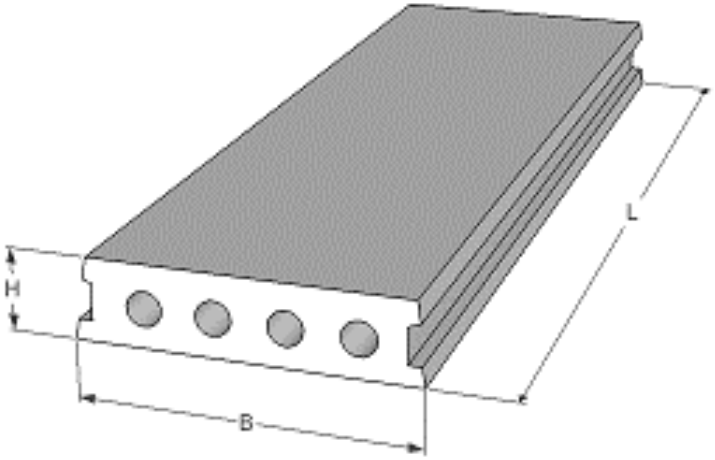

Hollow-core floors

Martin Dobler Projektmanagement GmbH
Wingertstr. 6 | 6824 Schlins | Österreich
Tel. +43 660 677 59 18
info@martindobler.com | www.martindobler.com

Construction systems for residential buildings

Solid floor slabs

Martin Dobler Projektmanagement GmbH
Wingertstr. 6 | 6824 Schlins | Österreich
Tel. +43 660 677 59 18
info@martindobler.com | www.martindobler.com

Construction systems for residential buildings

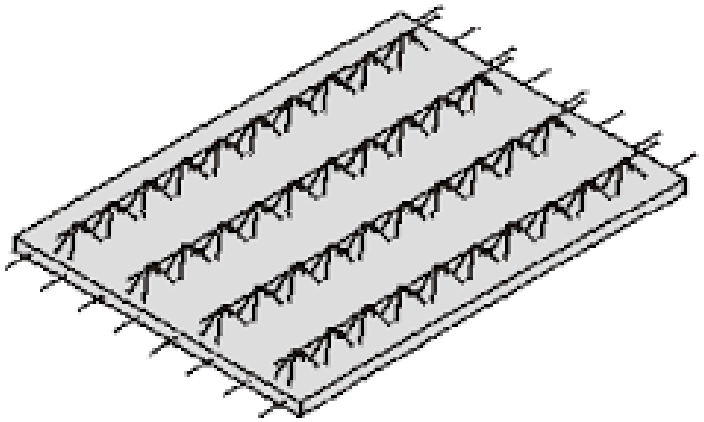

Composite floor plates

Martin Dobler Projektmanagement GmbH
Wingertstr. 6 | 6824 Schlins | Österreich
Tel. +43 660 677 59 18
info@martindobler.com | www.martindobler.com

Construction systems for residential buildings

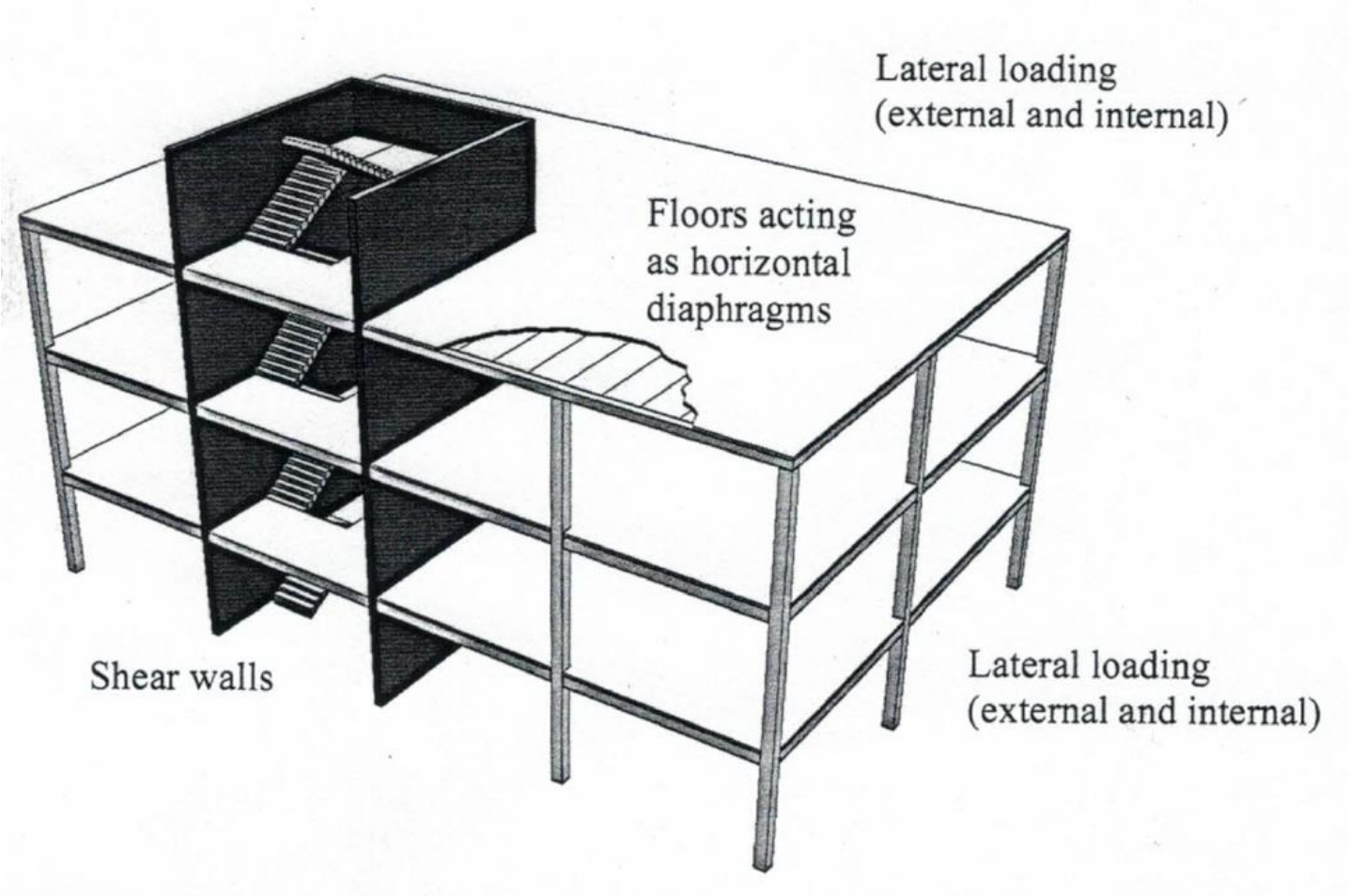

Typical static system in residential buildings

Construction systems for residential buildings

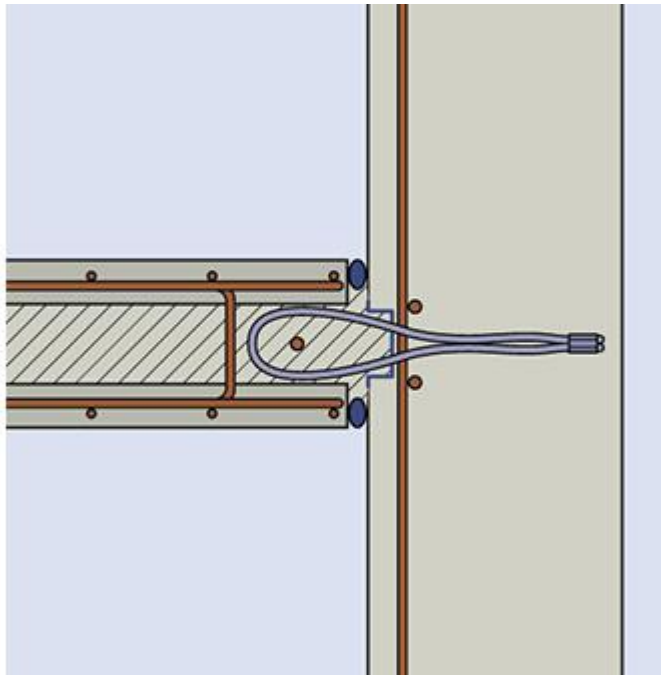

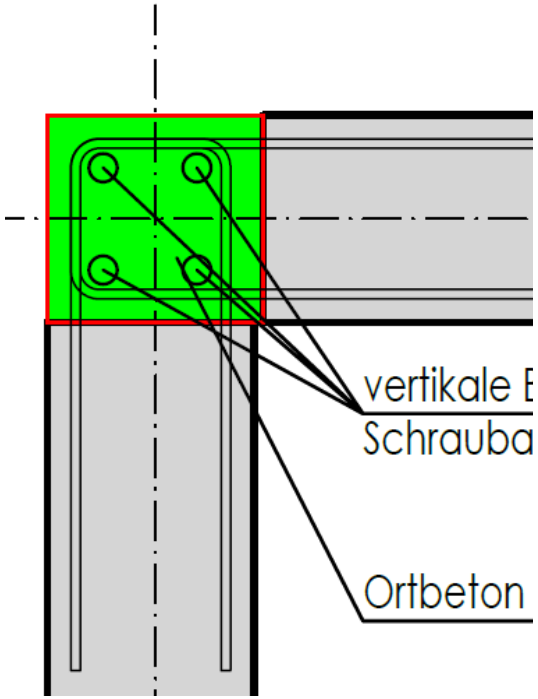

Examples of connections

Martin Dobler Projektmanagement GmbH
Wingertstr. 6 | 6824 Schlins | Österreich
Tel. +43 660 677 59 18
info@martindobler.com | www.martindobler.com

Construction systems for residential buildings

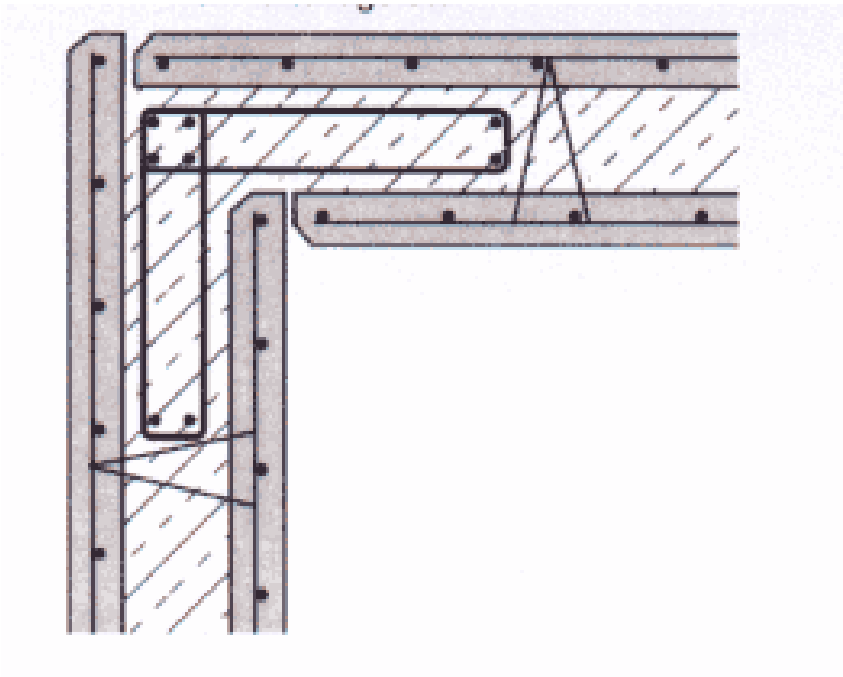

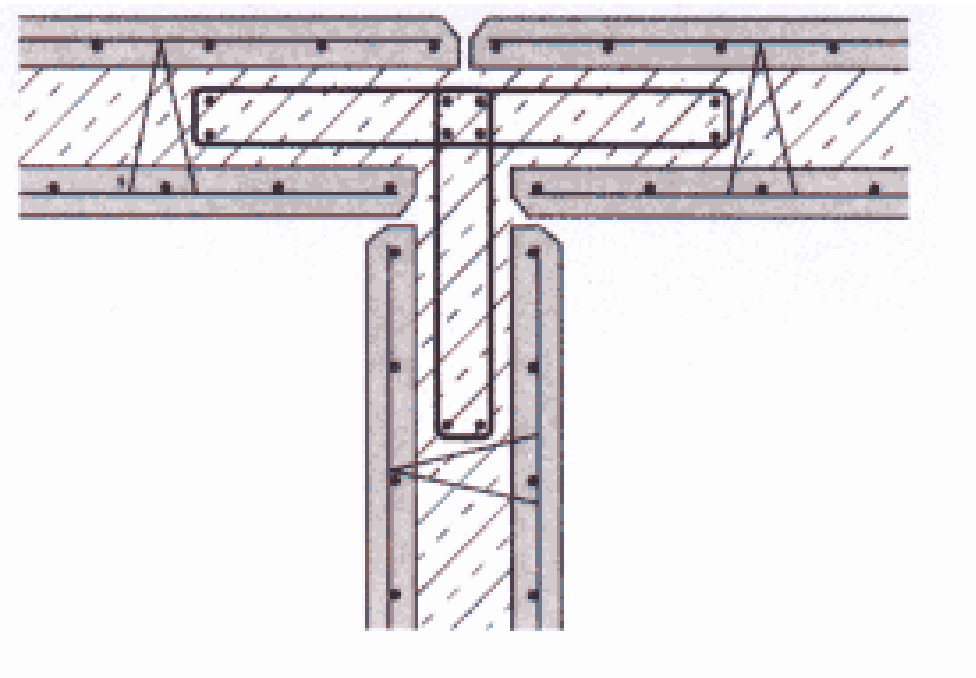

Examples of connections

Martin Dobler Projektmanagement GmbH
Wingertstr. 6 | 6824 Schlins | Österreich
Tel. +43 660 677 59 18
info@martindobler.com | www.martindobler.com

Construction systems for residential buildings

How to find the right system for you company or your project?

In order to establish a construction system using precast concrete elements that suits your needs, I recommend that you start by defining your constraints. What does a normal building project look like?

This typical building will act as a basis for establishing the ideal construction system, bearing in mind the technical specifications and, above all, the economic efficiency.

Setting up a precasting plant

The main questions:

Where? - The first question concerns the location of the plant.

What? – What should be produced?

How? – What production style is required?

What level of automation is economically viable?

Setting up a precasting plant

Option 1 – Precasting plant with stationary production lines

consisting of:
Hall approx. 120 x 15 m = 1,800 m² for production
Hall approx. 60 x 15 m = 900 m² for manual steel processing – Reinforcement is supplied pre-curved
Storage area 100 x 15m

5 tilt tables 20 x 4,0m
Track for solid floor plates 100m x 2,50m

Concrete is bought in from external suppliers

Investment excluding plot:

Building and storage area:	€ 1,350,000
Equipment:	€ 850,000
Total:	**€ 2,200,000**

Example of precast plants

Setting up a precasting plant

Option 2 – Pallet circulation system

Medium-sized precasting plant (circulation system) with moderate degree of automation for wall and floor elements

consisting of:
Hall approx. 120 x 50 m = 6,000 m² for production
Hall approx. 100 x 25 m = 2,500 m² for machine steel processing
Storage area 200 x 35m

Circulation system with 40 pallets 15 x 3.6m
Mesh welding system
Concrete mixing plant

Investment excluding plot:

Building and storage area:	€ 4,000,000
Mixing plant:	€ 1,500,000
Mesh welding system:	€ 2,500,000
Circulation system:	€ 5,200,000
Other:	€ 1,200,000
Total:	**€ 14,500,000**

Example of precast plants

Setting up a precasting plant

Option 3 – Mobile battery moulds

Mobile battery moulds with 20 chambers on the building site

consisting of:
No hall, open-air production
Foundations for storage and production
Storage area 50 x 20m

Battery moulds with 20 chambers
Crane system 20 x 100 m = 2,000 m² for production and storage, no roof
Manual open-air steel processing – Steel is supplied pre-curved

Concrete is bought in from external suppliers

Investment excluding plot:

Foundations:	€ 50,000
Equipment:	€ 1,850,000
Total:	**€ 1,900,000**

Example of precast plants

Setting up a precasting plant

	Option 1	Option 2	Option 3
	Stationary production	Circulation system	Battery moulds
Investment in €:	2,200,000	14,500,000	1,900,000
Capacity in m² per year:	96,000	190,080	62,400
Wage hours per m²	0,41	0,24	0,46
Manufacturing costs € per m²	51,00	43,00	55,00
Transport costs (30km) in €/m²	5,00	5,00	0,00
Assembly costs in €/m²	15,00	15,00	15,00
Solid wall, solid floor plate pre-assembled * in €/m²	71,00	63,00	70,00

*……All costs are calculated including plant depreciation costs, 80 kg/m³ steel are included in the calculations. Products: Solid walls d=18cm, solid floor plate elements d=20cm

Martin Dobler Projektmanagement GmbH
Wingertstr. 6 | 6824 Schlins | Österreich
Tel. +43 660 677 59 18
info@martindobler.com | www.martindobler.com

Resume

- Industrialization
- Building systems in general
- Building systems with precast concrete
- Economy aspects of an precast production plant
- Requirements for successful industrialization

Martin Dobler Projektmanagement GmbH
Wingertstr. 6 | 6824 Schlins | Österreich
Tel. +43 660 677 59 18
info@martindobler.com | www.martindobler.com

Implementing new construction methods on the market

In order to make a construction system more attractive to the general public, I recommend the following measures:

- As the operator of a precast concrete plant, I can recommend that you create technical documents as the basis for the architectural planning stage
- Support architects and engineers through consultations
- Create cost comparisons with conventional construction methods and convince your market partners
- Take a chance and invest in prototypes

These are just some examples of possibilities that of course need to be adapted to the needs of the local market.

Martin Dobler Projektmanagement GmbH
Wingertstr. 6 | 6824 Schlins | Österreich
Tel. +43 660 677 59 18
info@martindobler.com | www.martindobler.com

Consulted for precast concrete

If you are interested in building a precast concrete plant or using precast concrete methods for your building projects, I would be happy to act as advisor. Please do not hesitate to get in touch.

Bmst. Ing. Martin Dobler
Austria

projektmanagement
für betonfertigteilbau
martin dobler

Thank you for listening!

26.7.2017